Premium Sponsors

CADFEM® ANSYS®

Exhibitors

LIGHTTRANS CFturbo® MAGNA CRESES

Data based ROM in 3D

Part 1: Parameterization of measured data

Christopher Zechmeister

Parameterization of measurements with SoS
Overview

- Measurements can be data obtained from
  - hardware experiments
  - Virtual experiments (results from DOE)
- SoS:
  - Find statistical model for field data (signals, geometric variations, variations of material parameters or loading in space or time)
  - Given a statistical model we can simulate new random geometries and analyze the influence of geometric tolerances in a robustness analysis (DOE)
- Software demonstration:
  1. How to import and analyze measurements from laser scans ?
  2. How to create a random field model ?
  3. How to generate random geometric variations in ANSYS WB ?

Engine mounting console

- Engine mounting console as cast component with polished holes
- 10 measurements in STL format
- Measurements already adjusted by external software
- Reference geometry as ANSYS Workbench model

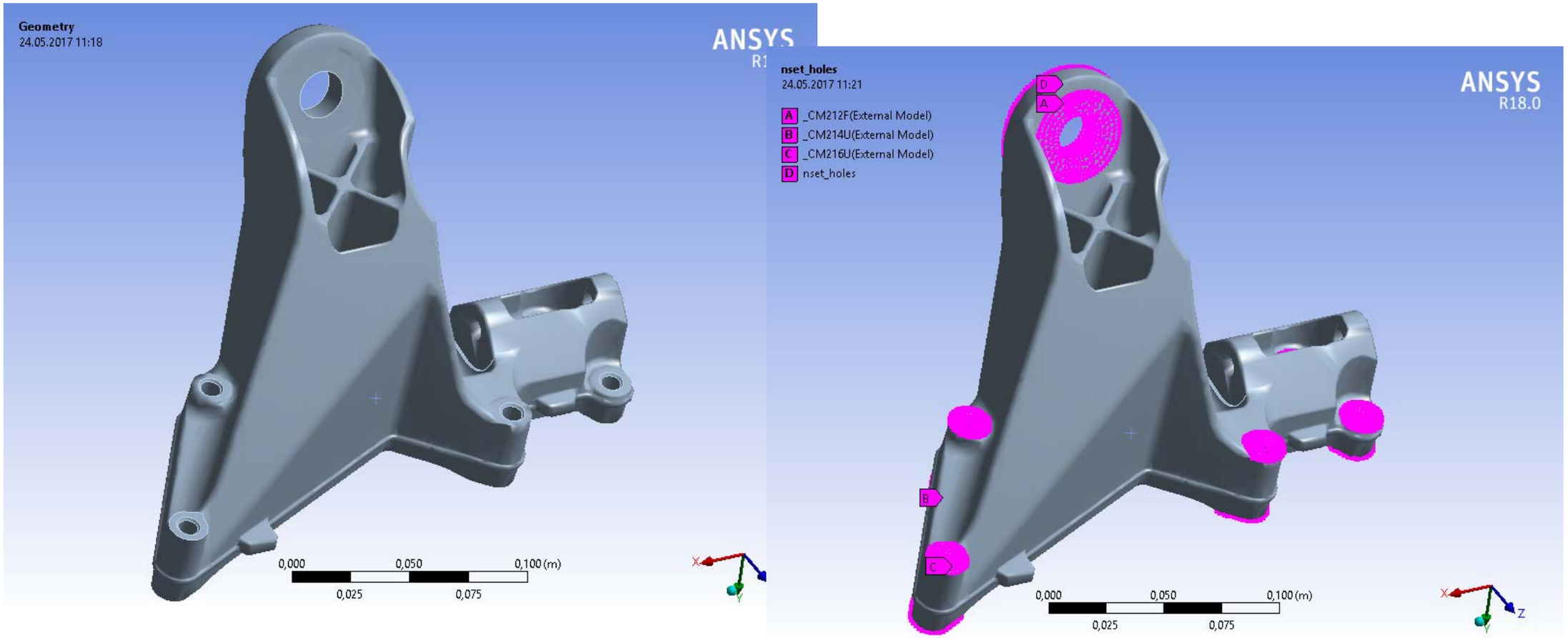

Engine mounting console

Properties of STL measurements:

- STL files describe only the surface geometry of 3D objects using an unstructured triangles mesh

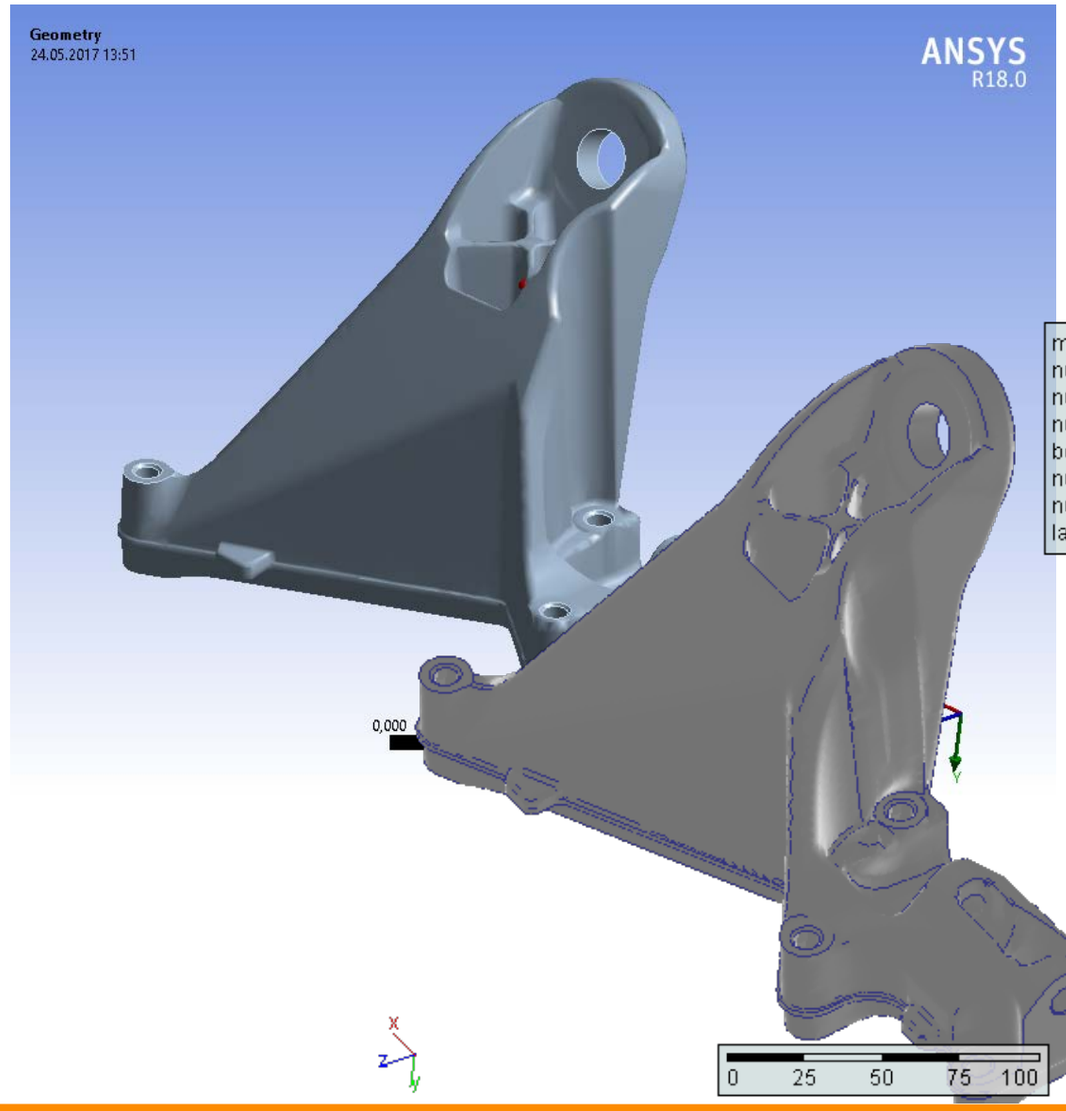

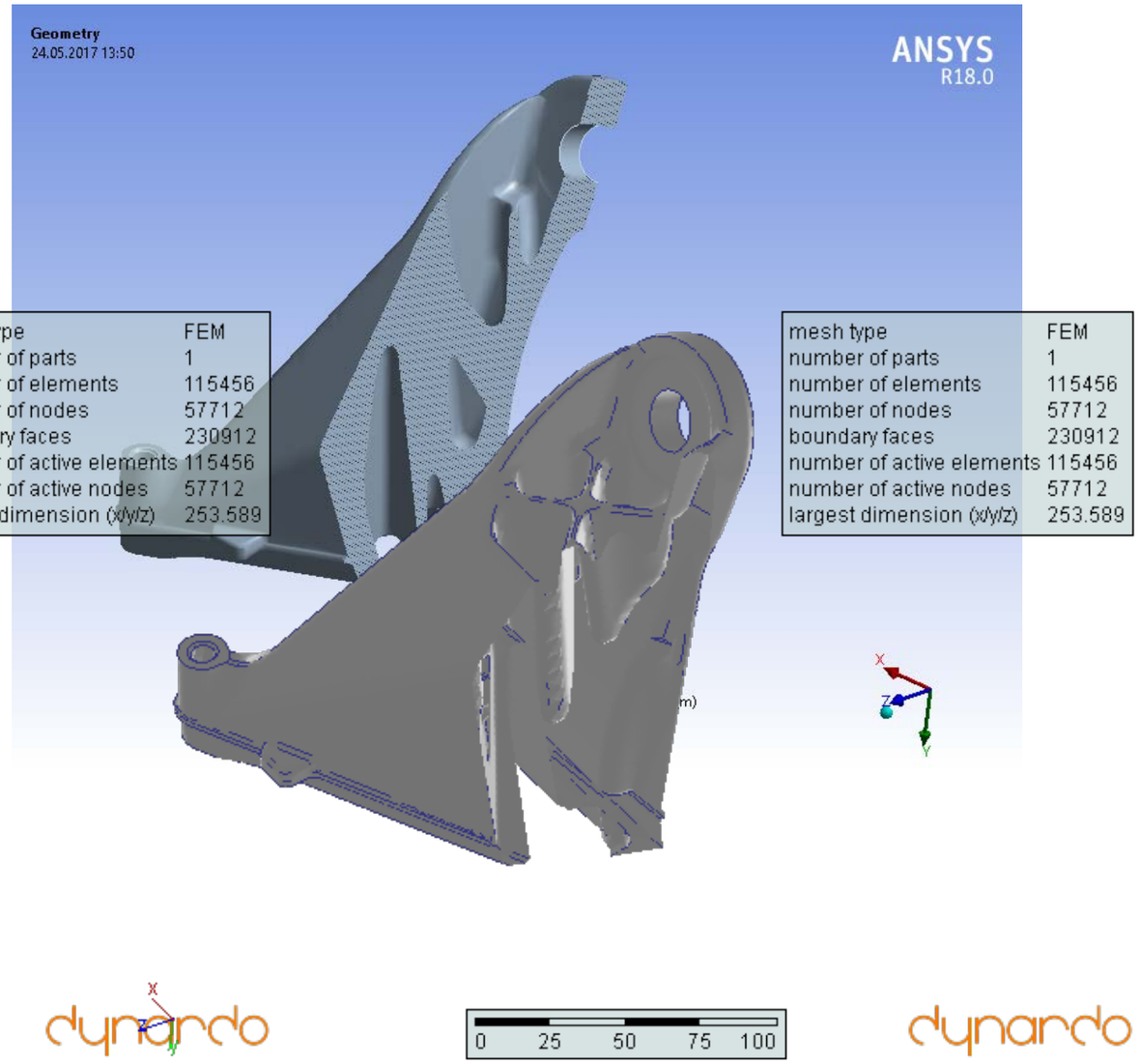

Engine mounting console

Postprocessing recommendations for STL files / measurements as input to SoS:

- Number of triangles/nodes should correspond to the reference mesh
- Measurements should be defined in the same unit and coordinate system as the reference mesh
- STL file coordinates should be adjusted to the reference mesh
- Measurement outliers and artefacts should be removed
- Gaps and holes in the surface tessellation should be closed
- Close boundary (for solids)

Types of random fields
Depending on task and number of input data

Model type	Inputs	Properties	Application
Empirical random field	Many measurements	Accurate description of reality	Robustness analysis, Quality control, Maintenance
Synthetic random field model	Few measurements	mean+stddev from measurements, spatial correlation from assumption	Robustness analysis: Predict Pf based on true magnitude of variations
Tent model	Few measurements	Mean+stddev from measurements	Needs more parameters, but can localize effects on structure
Synthetic random field model	Single/no measurement	Based on assumptions (artificial)	Check if variation has impact
Tent model	No measurement	Artifical	Shape optimization and sensitivity analysis

dynardo

SoS

Data based ROM in 3D

Part 2:
Sensitivity analysis and Approximation of CAE models

Sebastian Wolff

Field meta models
Overview

- FMOP:
  - Replaces a complete CAE solution for al FEM nodes/elements
  - Based on DOE
- Used to
  - Approximate CAE solution in real-time
  - Spatial sensitivity analysis

- Software demonstration:
  1. Import data from ANSYS DOE
  2. Create FMOP and perform sensitivity analysis
  3. Minimize maximum stresses based on FMOP approximation of stress

Premium Sponsors

CADFEM® ANSYS®

Exhibitors

LIGHTTRANS CFturbo® MAGNA CRESES