Premium Sponsor

CADFEM®

Sponsor

BETA
SIMULATION SOLUTIONS

Exhibitors

CAESES

MATH 2 MARKET

esi get it right®

Workshop

Combining functional optimization with costs

Agenda

Einführung (Will)

Motivation und industrielle Relevanz (Fuchs)

Industriebeispiel BOSCH (Fuchs)

Diskussion Bosch Beispiel

Kundenbeispiel Trump mit eigenem Kostentool am CAD Programm (Will)

Dynardo Beispiel der Verknüpfung von Metamodellen der funktionalen Optimierung mit Kostenmodellen in Excel (Will)

Diskussion Dynardo Beispiel

Combine functional optimization with cost optimization

Metal sheet optimization TruLaser Center 7030

To optimize „ease of use", flexibility and speed of the production process TRUMPF include material transport into the machine optimization process.

Part 1: weight/stiffness optimization for transport system „SortMaster Speed"

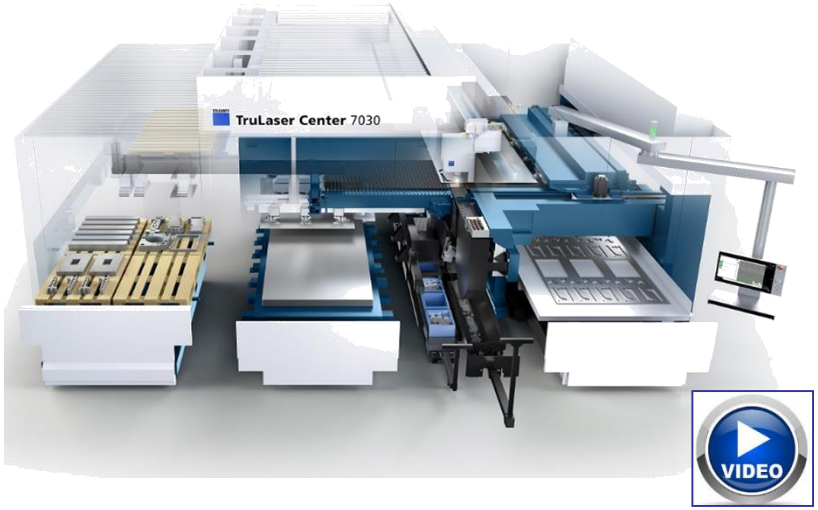

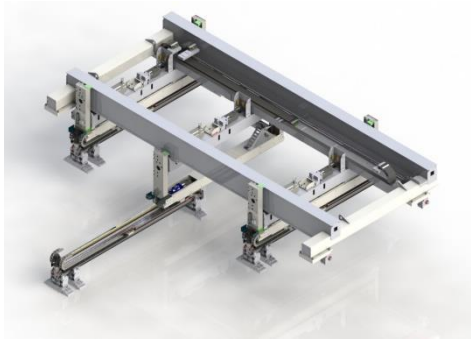

By courtesy of: TRUMPF

Stiffness and cost optimization for „Klemmeinheit"

All pictures are taken from:
Blömker, C.: Struktur und Herstellungskostenanalysis zur ganzheitlichen Optimierung von komplexen Blechbaugruppen; WOST, 2017, Weimar, Germany, www.dynardo.de

Part 1: Weight optimization

- Sheet thicknesses are varied

- Setup:

7 Load Cases

7 FE-Simulation
≙ ∑ **52 Min** runtime

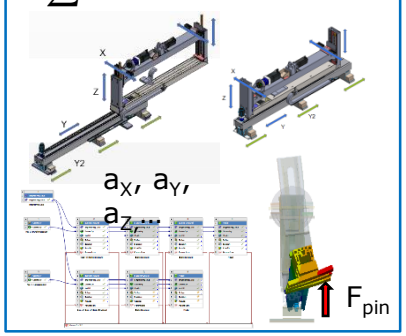

18 Variation Parameter

Variation Window (0 to 20mm)

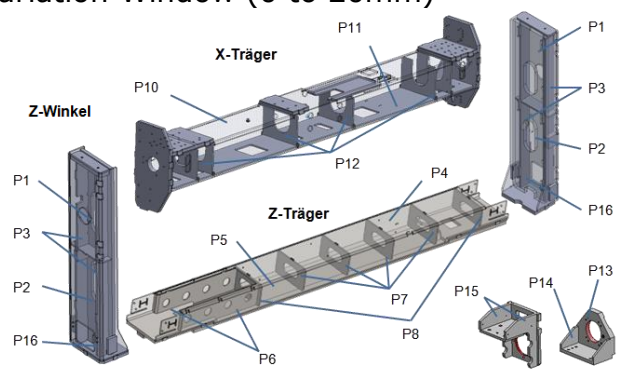

15 Responses

Displacements, Mass, Eigen frequency, …

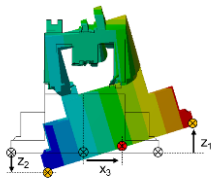

x_1, x_2, z_1,…
phi_x,
phi_Y,…
$f_{o,1}$, $f_{o,2}$,…

- one design evaluation last 52 minutes
- Factorial DOE to scan 18-dimensional design space much to costly

By courtesy of: TRUMPF

All pictures are taken from:
Blömker, C.: Struktur und Herstellungskostenanalysis zur ganzheitlichen Optimierung von komplexen Blechbaugruppen; WOST, 2017, Weimar, Germany, www.dynardo.de

Part 1: Weight optimization

- optiSLang sensitivity+metamodelling approach allows to reduce the DOE sample set to 80

Scan of the design space using ALHS

Design Parameter
(**80 Design-Points**)

Design Responses

FE-calculations

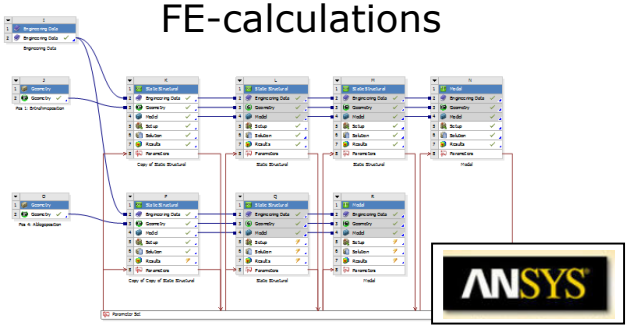

Correlation analysis and metamodeling

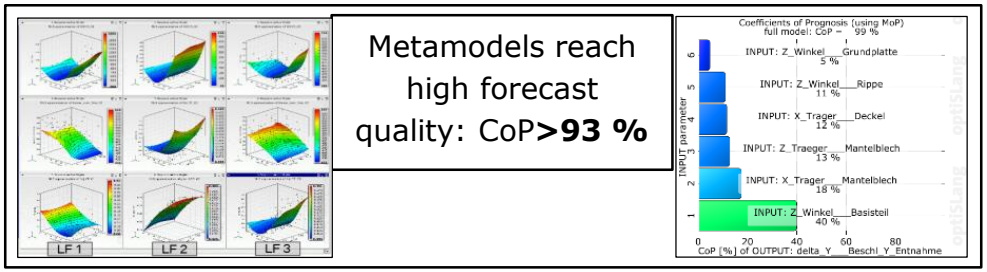

Metamodels reach high forecast quality: CoP**>93 %**

By courtesy of: TRUMPF

All pictures are taken from:
Blömker, C.: Struktur und Herstellungskostenanalysis zur ganzheitlichen Optimierung von komplexen Blechbaugruppen; WOST, 2017, Weimar, Germany, www.dynardo.de

Part 1: Weight optimization

Objective: weight reduction

Constraint: stiffness > 95% of initial design for all load cases

- Optimization Goal: Minimize Mass

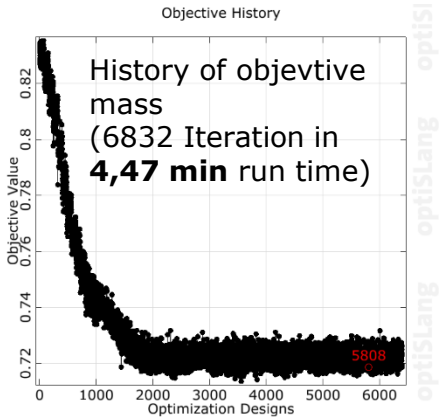

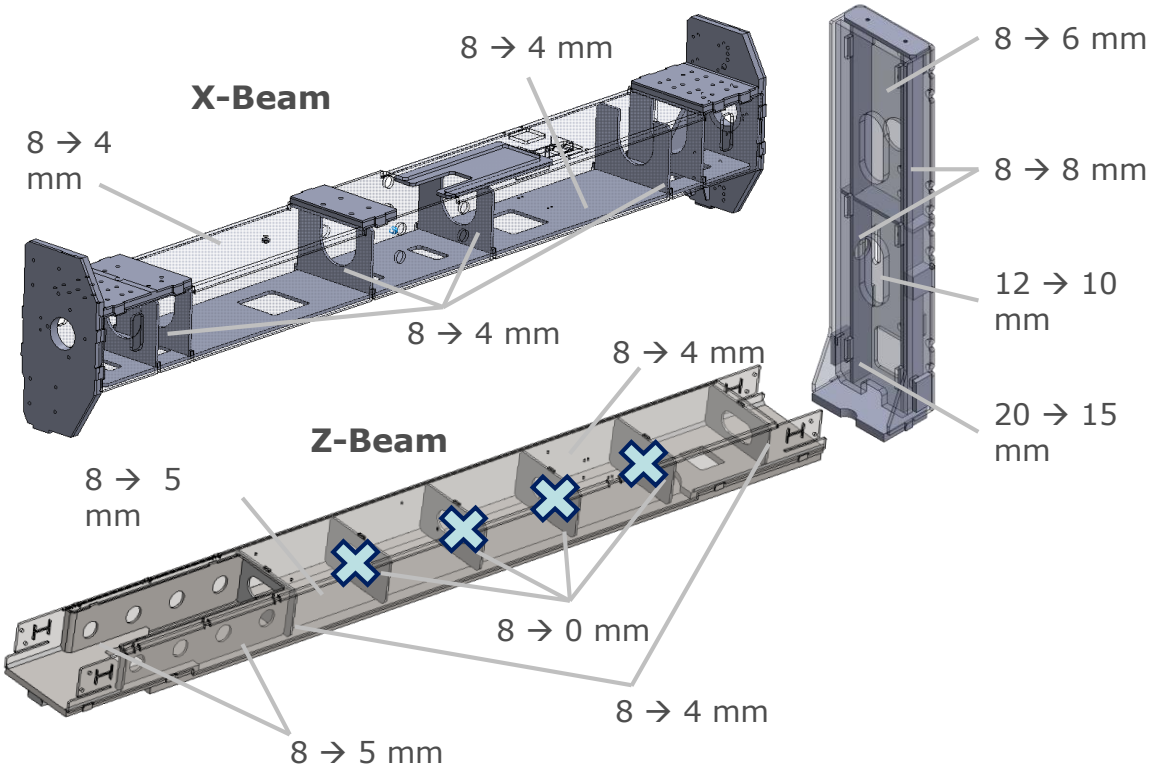

Weight reduction of 31% could be achieved!

By courtesy of: TRUMPF

All pictures are taken from:
Blömker, C.: Struktur und Herstellungskostenanalysis zur ganzheitlichen Optimierung von komplexen Blechbaugruppen; WOST, 2017, Weimar, Germany, www.dynardo.de

Part 2: Stiffness & cost optimization

Workflow CAD-CAE

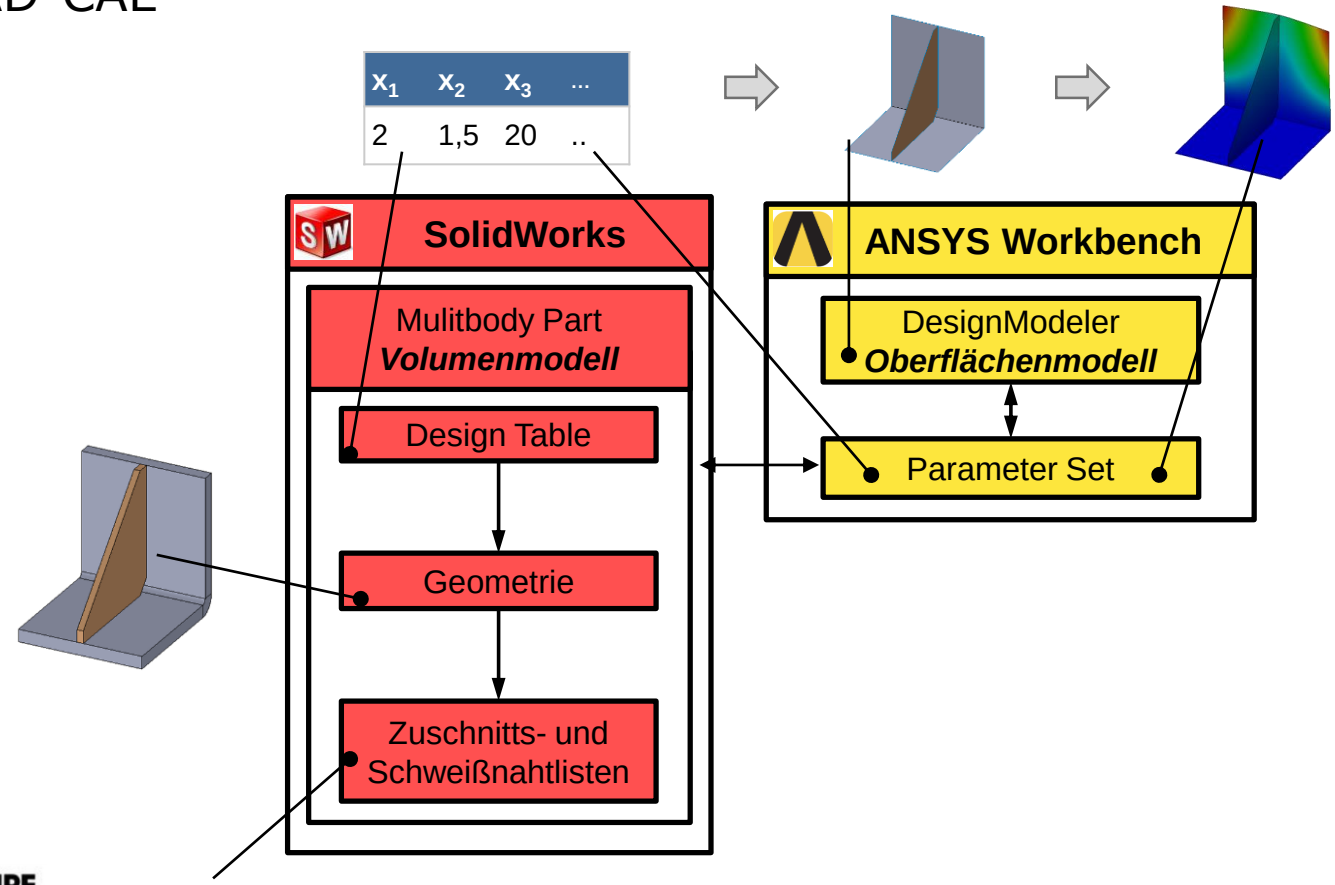

By courtesy of: TRUMPF

Weld list with number of welds, thickness, length,..

All pictures are taken from:
Blömker, C.: Struktur und Herstellungskostenanalysis zur ganzheitlichen Optimierung von komplexen Blechbaugruppen; WOST, 2017, Weimar, Germany, www.dynardo.de

Part 2: Stiffness & cost optimization

Workflow in ANSYS Workbench

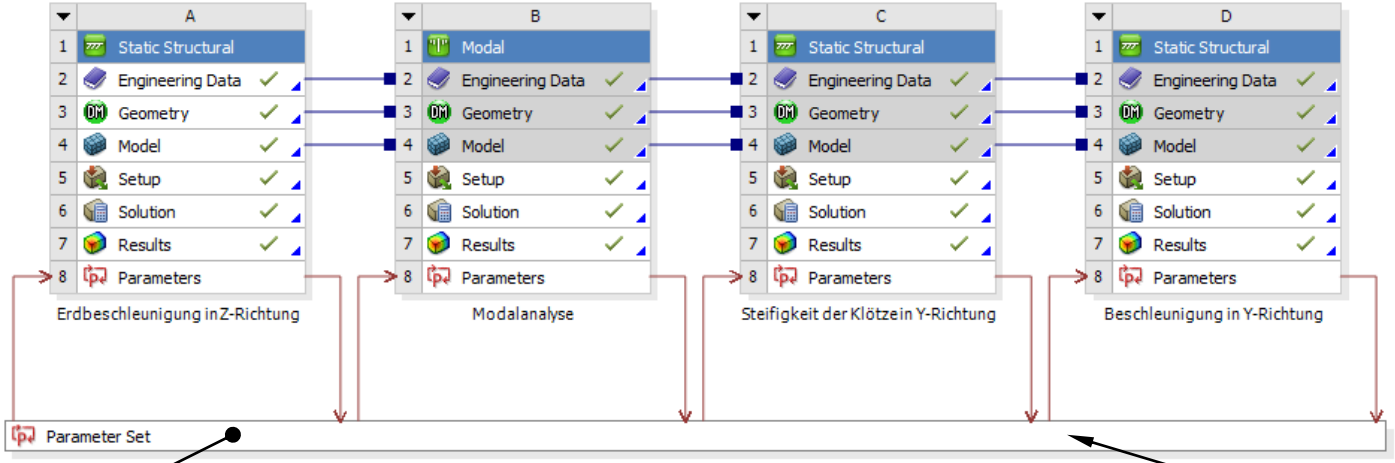

$\vec{x}$

$f(\vec{x}) = \sigma, f_0, u$

Parameter Set

Outline of All Parameters

	A	B	C	D
1	ID	Parameter Name	Value	Unit
2	Input Parameters			
3	Erbeschleunigung + Beschleunigung (A1)			
4	P13	Pattern1.FD1	300	mm
5	P14	Pattern2.FD1	93,75	mm
6	P15	Pattern2.FD3	3	
7	P16	Pattern4.FD1	750	mm
8	P18	Pattern5.FD1	91,25	mm
9	P19	Pattern5.FD3	3	
10	P123	Pattern1.FD3	2	
11	P124	Pattern4.FD3	2	

Geometry

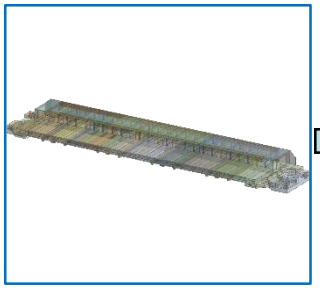

Model

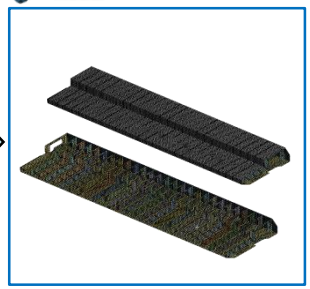

Setup Solution Results

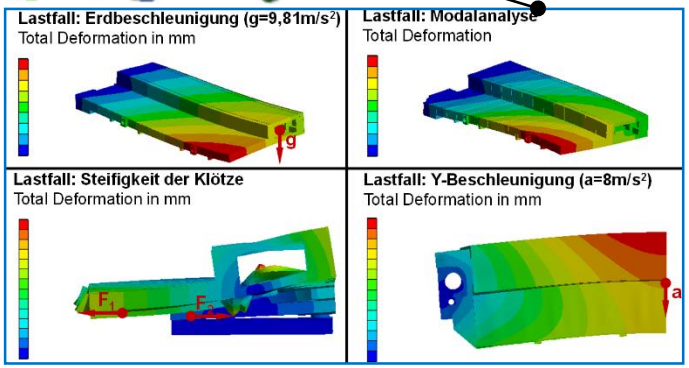

By courtesy of: TRUMPF

All pictures are taken from:
Blömker, C.: Struktur und Herstellungskostenanalysis zur ganzheitlichen Optimierung von komplexen Blechbaugruppen; WOST, 2017, Weimar, Germany, www.dynardo.de

Part 2: Stiffness & cost optimization

Workflow CAD-Costs: To include the costs of material and production process an user written application was linked to SolidWorks.

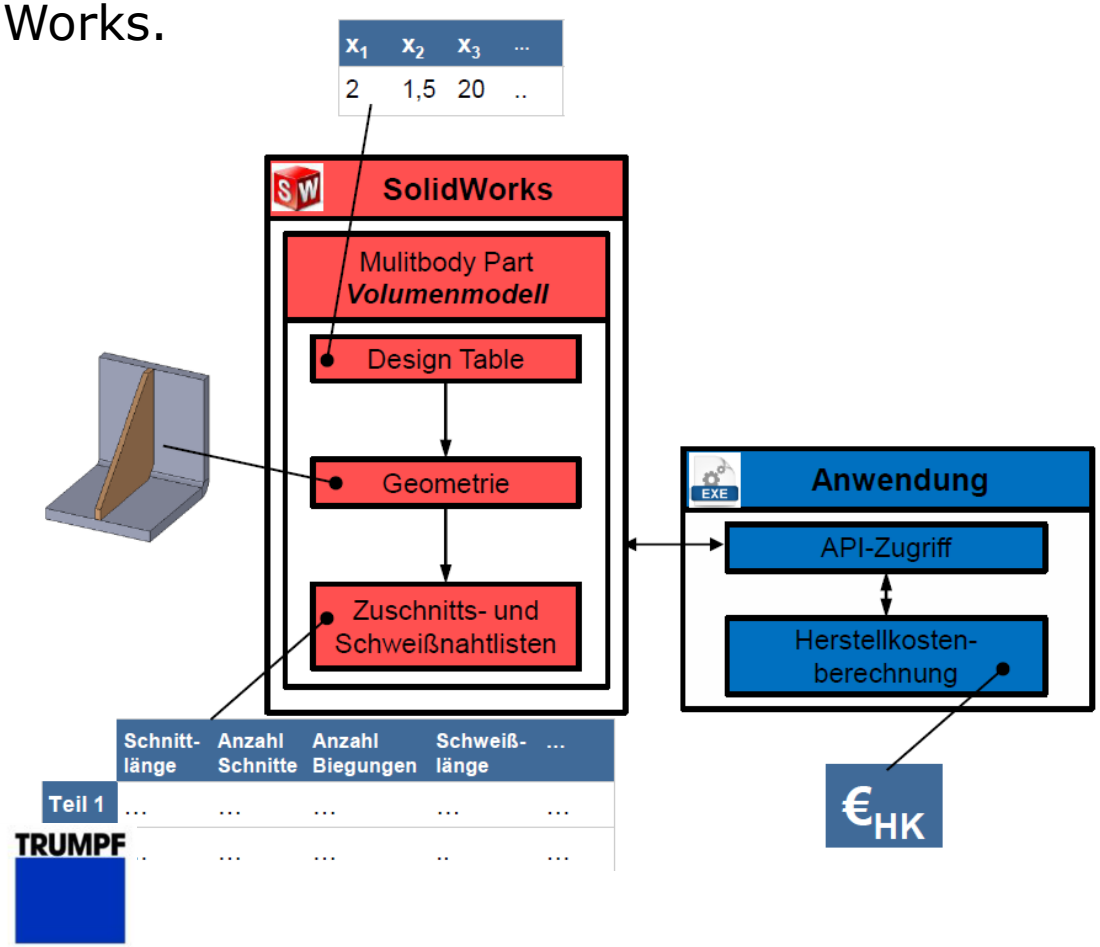

Total cost of production include all costs from base material to the final product and is linked to TRUMPF data bases.

By courtesy of: TRUMPF

All pictures are taken from:
Blömker, C.: Struktur und Herstellungskostenanalysis zur ganzheitlichen Optimierung von komplexen Blechbaugruppen; WOST, 2017, Weimar, Germany, www.dynardo.de

Part 2: Stiffness & cost optimization

Whole workflow is integrated and hosted by optiSLang

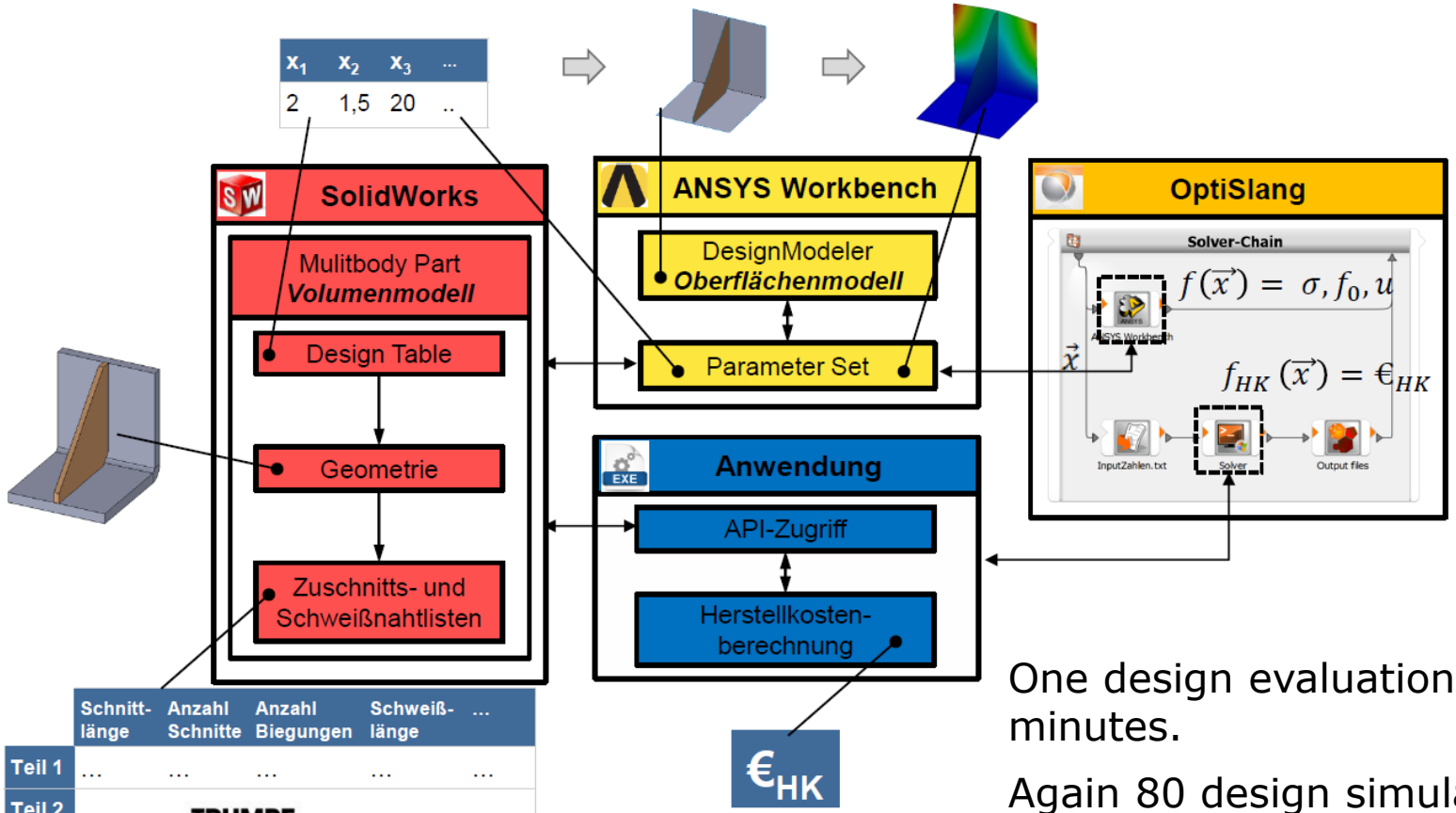

	Schnitt-länge	Anzahl Schnitte	Anzahl Biegungen	Schweiß-länge	...
Teil 1	...	...	...	...	...
Teil 2	...	.	..	..	...

By courtesy of: TRUMPF

One design evaluation last 12 minutes.

Again 80 design simulations are spend to scan the design space.

All pictures are taken from:
Blömker, C.: Struktur und Herstellungskostenanalysis zur ganzheitlichen Optimierung von komplexen Blechbaugruppen; WOST, 2017, Weimar, Germany, www.dynardo.de

Part 2: Stiffness & cost optimization

Results Sensitivity Analysis

Sensitivity analysis shows

- ribs are the cost driver
- Cover sheet thickness more effective for stiffness/cost optimization
- Cost and stiffness goals are in conflict, therefore Pareto optimization becomes necessary

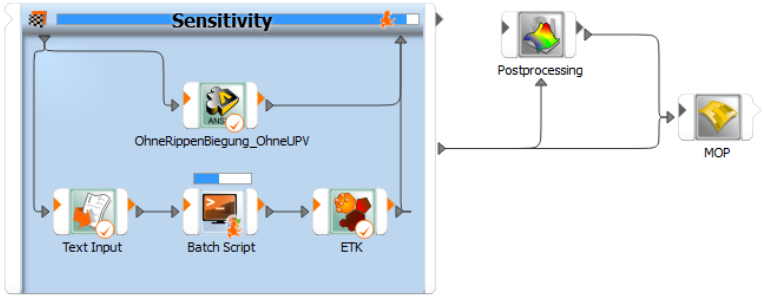

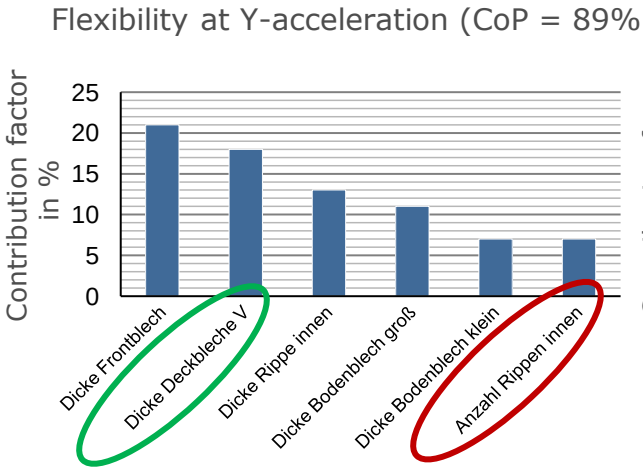

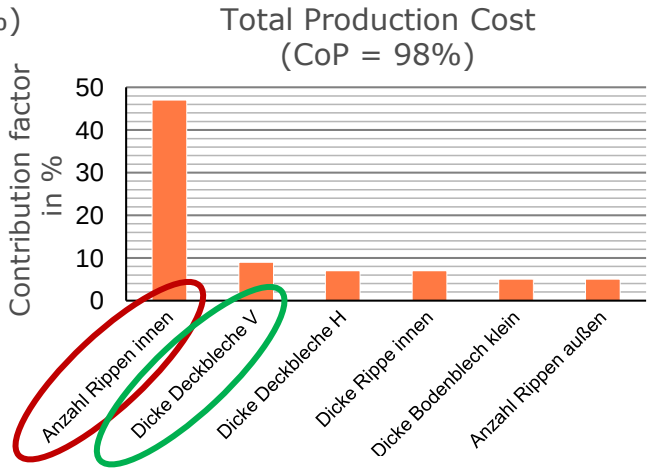

By courtesy of: TRUMPF

All pictures are taken from:
Blömker, C.: Struktur und Herstellungskostenanalysis zur ganzheitlichen Optimierung von komplexen Blechbaugruppen; WOST, 2017, Weimar, Germany, www.dynardo.de

Part 2: Stiffness & cost optimization

Results Pareto Optimization

Objectives:

cost reduction and stiffness increase

Constraints:

deformations, stresses,

Pareto Frontiers show large optimization potential.

Total costs can be reduced by **27%** by having the same stiffness than the start design!

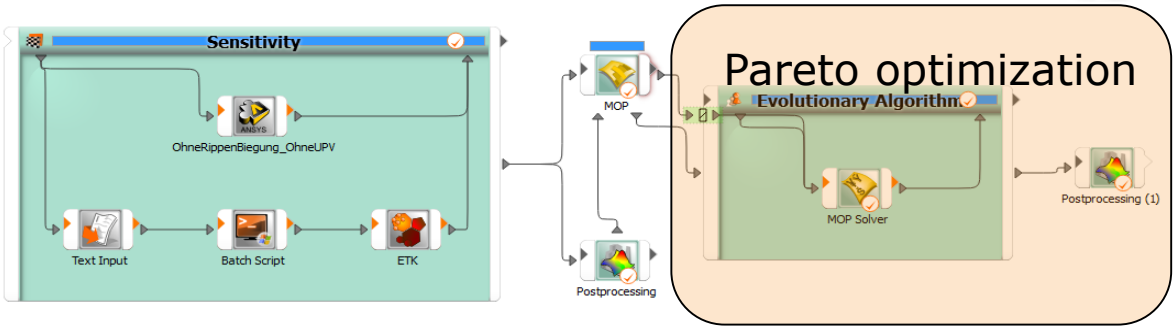

Pareto optimization at MOP

(10.000 design evaluations in 5 minutes run time

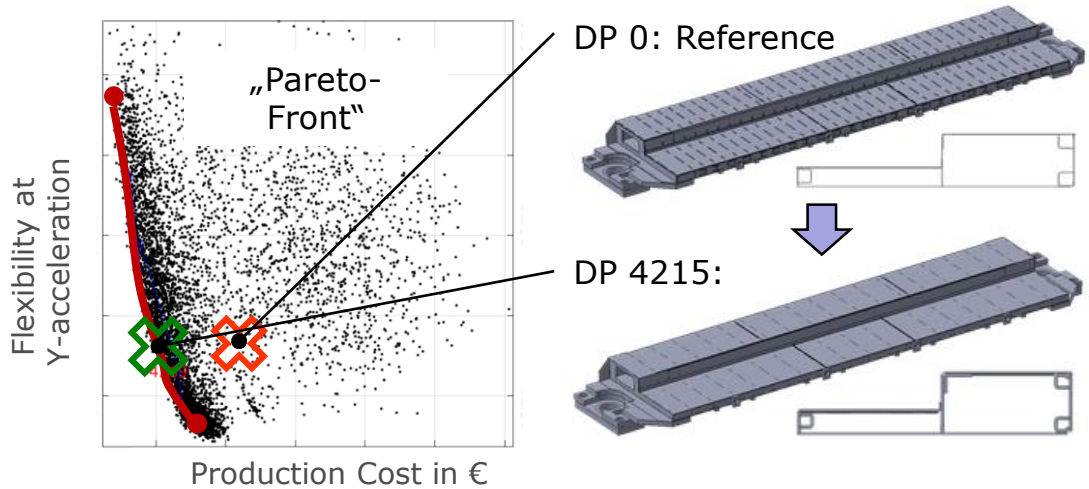

By courtesy of: TRUMPF

All pictures are taken from:

Blömker, C.: Struktur und Herstellungskostenanalysis zur ganzheitlichen Optimierung von komplexen Blechbaugruppen; WOST, 2017, Weimar, Germany, www.dynardo.de